PUMATRONIX


# VTR 600

HIGH PRECISION AND EFFECTIVENESS FOR POLICE OPERATIONS
IN INSPECTION OF VEHICLES

# Product

**Pumatronix Equipamentos Eletrônicos Ltda.**

Rua Bartolomeu Lourenço de Gusmão, 1970. Curitiba, Brasil



Visit our website https://www.pumatronix.com

Send comments about this document to the email suporte@pumatronix.com

Information contained in this document is subject to change without prior notice.

Pumatronix reserves the right to modify or improve this material without obligation to notify changes or improvements.

Pumatronix grants permission for downloading and printing this document, provided that the electronic or physical copy of this document contains the full text. Any alteration to this content is strictly prohibited.

# Change History

| Date | Revision | Content updated |
|---|---|---|
| 12/13/2023 | 1.0 | Initial Version |

# Overview

In a scenario where crime demands swift and effective responses, Pumatronix stands out with the VTR600, a solution that combines Internet of Things (IoT) and Artificial Intelligence to revolutionize law enforcement operations, redefining the fight against crime and providing security to citizens. Designed for application in public safety actions such as electronic fencing, police operations, and fiscal operations.

*Figure 1 – VTR600*

The VTR600 reads moving vehicle license plates, enabling immediate identification of vehicles with circulation restrictions, stolen, or associated with criminal activities, issuing instant alerts directed to tablets, cell phones, and in-vehicle multimedia systems. Advanced connectivity with Gigabit network interfaces, GPS, Wi-Fi 3G, and 4G ensures efficient communication in any operational context. Its integration with public safety systems ensures effective cooperation among entities, strengthening crimefighting operations, resulting in safer and higher-quality urban environments for citizens.

The VTR600 offers a powerful image capture and processing engine and the flexibility to incorporate custom software, allowing adaptation to specific project needs. With a 2.3MP global shutter sensor, the VTR600 provides detailed vehicle classification, including type, make, model, and color. Its ability to capture images at speeds of up to 200km/h, day or night, synchronized with hardware flash, demonstrates its performance in challenging situations, providing accurate vehicle plate readings.

Furthermore, the VTR600 features an open platform that allows video capture and processing directly on the device itself, additionally storing data (without the need for an NVR - Network Video Recorder), eliminating the requirement for computers and routers.

The VTR 600 was designed for external installation to the vehicle, capable of withstanding various weather conditions. Its sturdy metal structure provides excellent heat dissipation, and low power consumption ensures superior performance in various applications.

# Handling Risks

| | |
|---|---|
| ⚠ | **The VTR600 was designed to operate at 12Vdc and can be directly connected to the vehicle's battery or plugged into the cigarette lighter socket. Do not connect any of the inputs directly to the electrical grid (AC)!** |
| ⚠ | **This equipment may come with lenses that are sensitive to mechanical impacts such as falls and extreme vibrations.** |
| ⚠ | **Installation Location: In cases where it's not possible to meet installation specifications, it's recommended to consult Pumatronix's Technical Support.** |

# Models

| Available Models | Resolution | Lens Type | Estimated range * (in meters) |
|---|---|---|---|
| VTR600 (S09L9IW1N1AJ) | 1920x1200px | Fixed 6 mm | 3 to 15m |

** The estimated range is defined based on the selected lens and identifies the distance range within which vehicle plate characters remain legible in OCR reading.*

| Image sensors | Lens | Integrated Lighting | Antennas | Network Interfaces | Optionals |
|---|---|---|---|---|---|
| **S09**: CMOS 1920x1200px | **L9**: Fixed 6 mm | **I**: Infrared | **W1**: Wi-Fi/4G/3G External antennas and integrated GPS | **N1**: Has 1 Network Interface | **A**: Digital Signature (TPM1.0) |
| | | | | | **J**: LPR Embedded |

**Digital Signature Functionality: Data encryption within the VTR600 is undergoing specification validation. Further details can be provided by Pumatronix's Technical Support.**

# Summary

# 1. Getting to Know the Product

The VTR600 line of image capture and processing devices was developed to read moving vehicle license plates and allows for the identification of vehicles with circulation restrictions, stolen, or suspected of involvement in criminal activities when integrated into security systems. The VTR600's 2.3 MP image sensor enables the capture and processing of images for up to three lanes. The sensor is combined with a set of fixed 6 mm lenses.

The quality and level of detail in the images captured by the VTR600 under ambient and artificial lighting are a result of additional functionalities alongside the optical assembly (image sensor with lenses) and an integrated illuminator of 16 LEDs.

Images captured by the VTR600 facilitate vehicle type identification, distinguishing between motorcycles, cars, trucks, and buses. This function is called the Classifier, which can be performed with high precision, detecting vehicles even in situations where the license plate is absent or with minimal character distinction. In addition to vehicle characterization in the image, automatic recognition of vehicle license plates (OCR) is available for Brazilian, Argentine, Chilean, Colombian, French, Mexican, Dutch, Paraguayan, Peruvian, and Uruguayan standards. Please consult Pumatronix's Sales Department for OCR availability in additional countries.

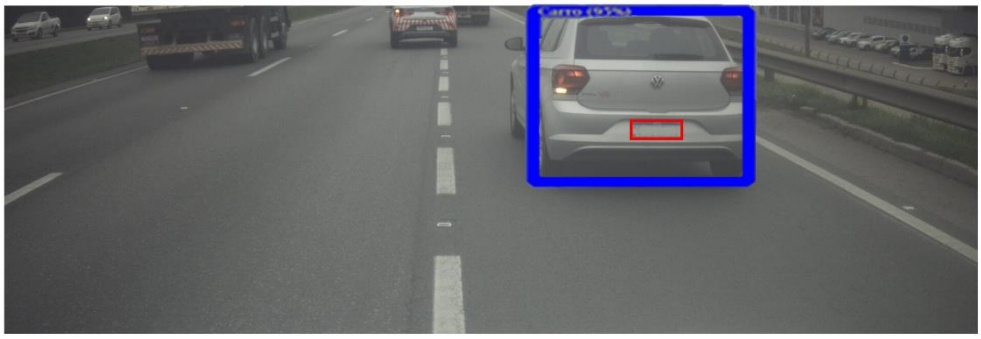

*Figure 2 - Live image preview with Classifier function enabled*

**The Classifier functionality is a Pumatronix library that identifies and classifies vehicles through images. To enable the Classifier on the VTR600, it's necessary to purchase a license for the library.**

The VTR600 delivers photos in JPEG format with a resolution of 1920 x 1200 pixels. Within these files, the comments field is filled with data related to each capture, containing image location coordinates, recognized license plates, identified vehicle types, and instant equipment configurations.

The VTR600 line offers 1 Gigabit Ethernet port to facilitate connectivity at monitoring points and enable remote and simultaneous access for multiple users. Access is performed through the equipment's Web Interface, and the VTR600 allows captured information to be SENT via FTP to an FTP server or to an ITSCAMPRO server via Pumatronix's proprietary communication protocol. Equipment access management is carried out by specifying network firewall rules or specifying Routes.

The VTR600 presents additional connectivity features. Cellular 4G and 3G mobile technologies are available for connection to the equipment, as well as communication via Wi-Fi and IoT M2M.

# 2. Generated Information

The VTR600 line captures images of up to three lanes in JPEG format and automatically provides the characters of Brazilian vehicle plates (both the old and Mercosur standards). Plates read in the images, captured vehicle types, and equipment configuration information are stored within the image files in the JPEG comment field. The quality of the generated JPEG files is adjustable, and the images can receive an overlay of a caption with configurable content in each Profile.

Redirecting images captured by the VTR600 can be done via wired data network (using the Gigabit Ethernet port), Wi-Fi network, or utilizing 4G and 3G mobile data networks. Using the communication interfaces, VTR600 images can be automatically sent to FTP servers, ITSCAMPRO, Lince, WebService, and APIs that allow integration with security system agencies such as PM-PR, PRF (SPIA), PM-MG (Helios), Detecta-SP, and Cortex.

Moreover, monitoring the equipment's operation and captures can be done in real-time through the ITSCAMPRO Mobile app.

Information about the Current State is provided on the home screen, displaying processor and memory usage/performance data, storage data, equipment runtime, Device ID (or Serial Number), GPS, and installed versions.

# 3. Mechanical Specifications

- Material: Aluminum and polycarbonate;
- IP Protection: IP66;
- Mounting: Fixed base on the vehicle's roof using magnets and a 60 cm Safety Cable, which should be attached to the vehicle's rack, providing greater stability in mounting.

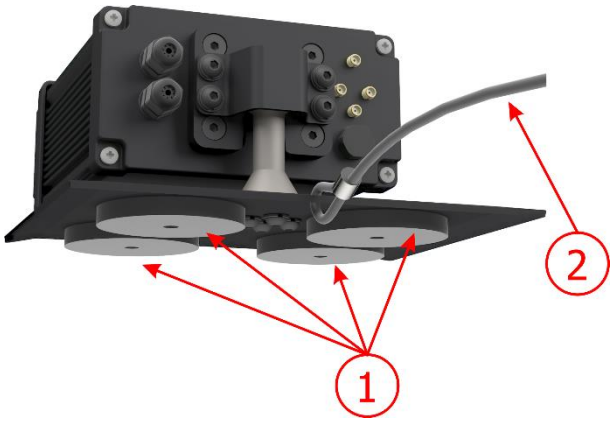


*Figure 3 – Fixing the VTR600: 1) base magnets, 2) safety wire rope*

**The Safety Wire Rope must remain attached to the vehicle's rack as an additional safety measure for securing the VTR600 to the roof and additionally ensuring greater stability for image capture framing. Periodically check if the cable is properly secured to the vehicle's rack.**

- Interfaces: The VTR600 presents the available connectors on the rear panel:

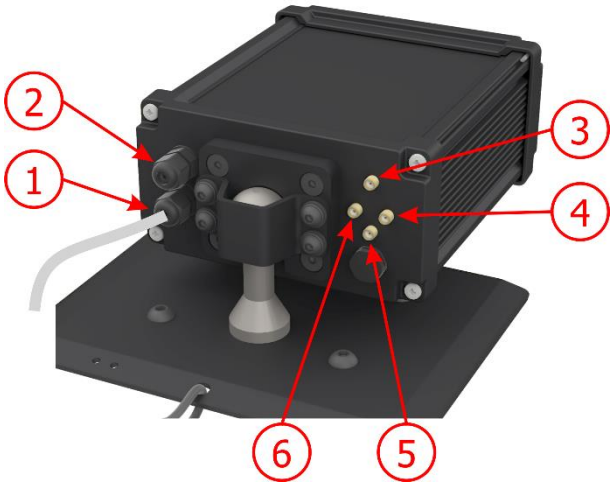


*Figure 4 - Interfaces available on the VTR600*

| | Interface | Specifications |
|---|---|---|
| **1** | Sleeve Cable | power connector, IOS |
| **2** | Gigabit Ethernet | conector RJ-45 (indicated EIA/TIA-568A standard) |
| **3** | 3G/4G Antenna | male SMA connector |
| **4** | MOV Antenna | |
| **5** | GPS Antenna | |
| **6** | Wi-Fi Antenna | |

- Temperature: -10 to 65 °C with relative humidity of 5 to 95% and without condensation;
- Weight:

| Model | Weight |
|---|---|
| VTR600 | 3500g* |

** Total weight of the device and base*

- Dimensions:

| Front View | Side View |
|---|---|
| 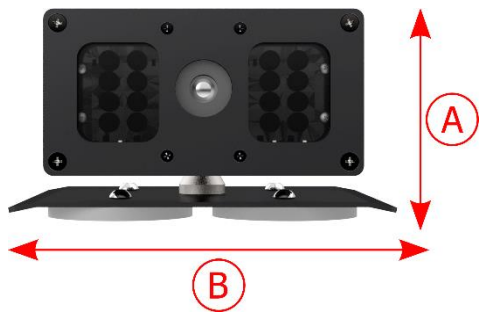  | 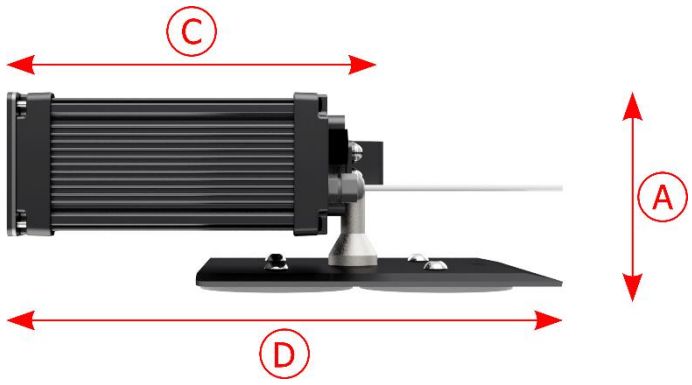  |

| | A) Height | B) Width | C) Device length | D) Overall length (device + base) |
|---|---|---|---|---|
| **Dimensions in millimeters** | 112* | 156 | 216 | 300 |

**Using connected antennas, the total height with support can reach 144 mm.*

# 4. Electrical Specifications

- Power Supply: Fonte 9~14,4 Vdc (Nominal 12V);
- Maximum input current: 2 A (with trigger) 0.7 A (without trigger)
- Typical power: 24 W (with trigger) and 8 W (without trigger);
- Maximum power: 30 W (with trigger) and 10 W (without trigger);
- Protection against reverse polarity: 45 V with a quick response of 2 µs to reverse polarity (ISO 7637-2);
- Protection against overvoltage (máx.): 28 V em 10/1000 µs (IEC 61000-4-5:2014);
- Protection against electrostatic discharge (DC power): ±30 kV per contact - Level B (IEC 61000-4-2/AEC Q100-002) and ±30 kV by air (IEC 61000-4-2/AEC Q100-002);
- Protection against fast electrical transients (EFT) (DC power): peak direct current at 10/1000 µs up to 53.3 A ±5% (ISO 7637 and IEC 61000-4-4);
- Protection against inrush current: 8 A in 2 seconds (IEC 63129:2020).

| VTR600 Interfaces | Electrical Specifications |
|---|---|
| 2 bidirectional ports (input or output) | Digital with 3.75 kV isolation, bidirectional, and individually programmable by users (maximum current 50 mA, maximum voltage 28 Vdc, and impedance of 10 kΩ) |
| 1 Gigabit Ethernet port | Dielectric isolation of 5 kVAC, protection against electrostatic discharge of ±30 kV per contact - Level B (IEC 61000-4-2) and ±30 kV in the air (IEC 61000-4-2), EFT for peak direct current in 5/50 ns up to 40 A ±5% (IEC 61000-4-4), and protection against surge current of 4 A (tP = 8/20 µs) (IEC 61000-4-5) |

| VTR600 Interfaces | Electrical Specifications |
|---|---|
| WiFi | Protection against electrostatic discharge ±8 kV per contact (IEC 61000-4-2) and ±15 kV in the air (IEC 61000-4-2) for the high-gain external antenna (2.45 GHz ISM, U-NII, Wi-Fi, WLAN Whip, 2.4~2.5 GHz 2.8 dBi) |
| 4G and 3G | Protection against electrostatic discharge ±8 kV per contact (IEC 61000-4-2) and ±15 kV in the air (IEC 61000-4-2) for straight external high-gain antennas (850 MHz, 900 MHz, 1.8 GHz, 1.9 GHz, 2.1 GHz CDMA, DCS, EDGE, GPRS, GSM, HSPA, PCS, UMTS, WCDMA, 824~960 MHz, 1.71~2.17 GHz 1.42 dBi, 1.91 dBi, 2.51 dBi, 3.23 dBi, 2.89 dBi)<br>(Certifications: GCF, FCC, ANATEL, NCC, RCM, CE) |
| GPS | Qualcomm® IZat ™ Gen8C Lite Multi-constellation Glonass, BeiDou/Compass, Galileo, and QZSS, with an external active antenna of 1.57~1.58 GHz 2 dBic |

| Interface | Connectivity Specifications |
|---|---|
| 1 Gigabit Ethernet port | 10/100/1000 tri-speed |
| WiFi | IEEE 802.11 standard b/g/n 2.4 GHz bands, with UDP transfer rate of 46 Mbps and TCP/IP of 28 Mbps |
| 4G and 3G | LTE-FDD/LTE-TDD/WCDMA/GSM technologies in bands:<br>LTE FDD: B1/B2/B3/B4/B5/B7/B8/B28,<br>LTE-TDD: B40,<br>WCDMA: B1/B2/B5/B8,<br>GSM/EDGE: Quad-band |
| IoT M2M | Supported with a rate of 150 Mbps downlink and 50 Mbps uplink |
| e-Sim | Communication with mobile networks with e-Sim |

| Component | Image Processing Specifications |
|---|---|
| CPU | Quad-core ARM™ A53 (1.2 GHz, support ARMv8 andNEON) |
| RAM memory | 16 Gb LPDDR4 (2100 Mbps e 1050 MHz) |
| Image sensors | Global Shutter 2.3 MP (1920x1200 px), with Day/Night mode (generates color images during the day and monochrome at night)<br>Physical size of the sensor: 1/2.6”<br>External \| Internal frame rate: 30fps<br>Minimum shutter of 48 µs and maximum of 30000 µs (or 30 milliseconds) |
| Internal storage | Available up to 4GB (with the total being 16 GB) |
| SD Card Storage | 32 GB |
| Watchdog | in hardware with a period of 50 seconds |

# Electrical connections

*Figure 5 – VTR600 power and signal connector (Microfit) (6-way sleeve cable)*

| Pin | Color | Description |
|---|---|---|
| **1** | Brown | VIN- |
| **2** | Red | VIN+ |
| **3** | Green | IO3+ |
| **4** | Yellow | IO3- |
| **5** | Grey | IO4+ |
| **6** | Blue | IO4- |

The power supply for the VTR600 is through the sleeve cable connection with a power source in the vehicle infrastructure. It is possible to use the vehicle's battery, or a plug connected to the cigarette lighter, and in each case, the installation is customized according to the car model:

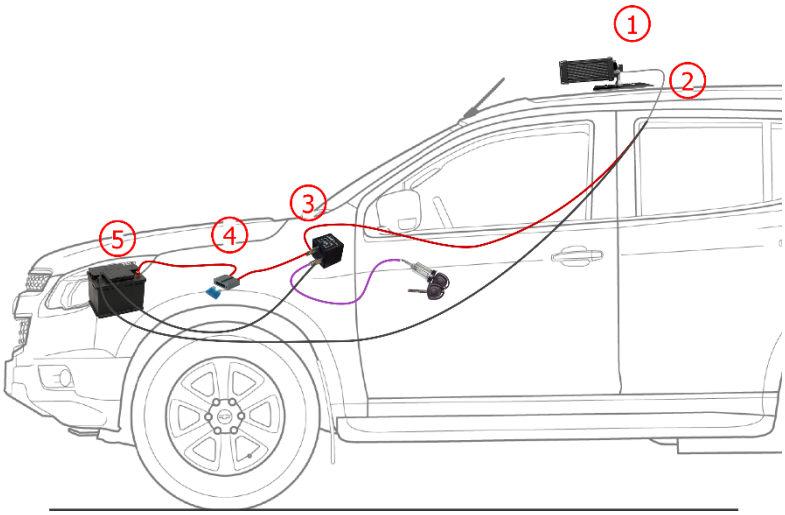


*Figure 6 - Installation model using the vehicle battery for power: 1) VTR600 fixed to the vehicle roof, 2) 6-way sleeve cable 12Vdc, 3) Auxiliary relay connected to the vehicle's ignition key, 4) Fuse, 5) Vehicle battery*

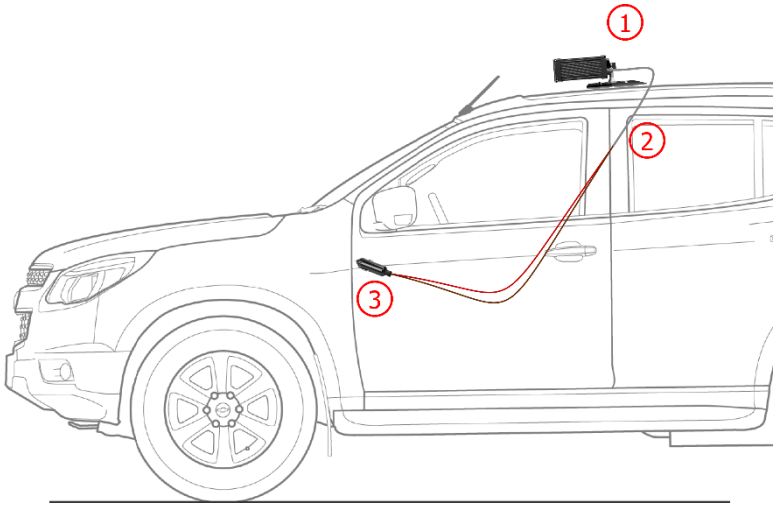


*Figure 7 - Installation model using the vehicle's cigarette lighter for power: 1) VTR600 fixed to the vehicle roof, 2) 6-way sleeve cable 12Vdc, 3) Plug connected to the vehicle's cigarette lighter*

## Ethernet Connection

The VTR600 enables communication with other devices using the TCP/IP protocol. For such connection, the equipment provides a Gigabit Ethernet port (RJ-45 connector). It is recommended to use the EIA/TIA-568A standard for connections.

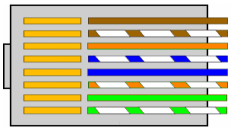

*Figure 8 - - RJ-45 Connector, EIA/TIA-568A Standard*

## Antenna Connections

The images captured by the VTR600 may include geolocation, provided by the integrated GPS in the equipment. Wi-Fi, 4G, and 3G signals can be amplified using an external antenna with an SMA connector (male connector, with a central pin).

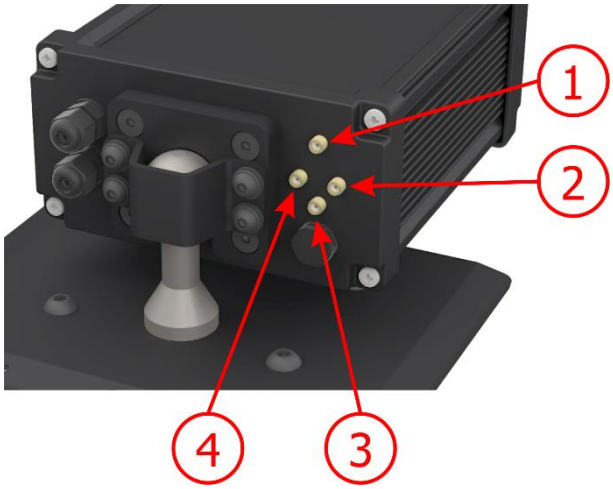


*Figure 9 – Antenna Connection Points* on the VTR600*

| | |
|---|---|
| **1** | 3G/4G Antenna |
| **2** | MOV Antenna |
| **3** | GPS Antenna |
| **4** | Wi-Fi Antenna |

** The antennas are provided for connection. In non-standard installation locations where the antenna is not effective for the application, contact Pumatronix support.*

**4G and 3G Technologies Specification: Contact Pumatronix Technical Support for using the VTR600 in other countries.**

# 5. Software Specifications

The VTR600 features a web interface for evaluating generated images and performing configurations. Access to the interface requires the following information to be provided:

| | |
|---|---|
| **IP** | 192.168.0.254 |
| **User** | *admin* |
| **Password** | *1234* |

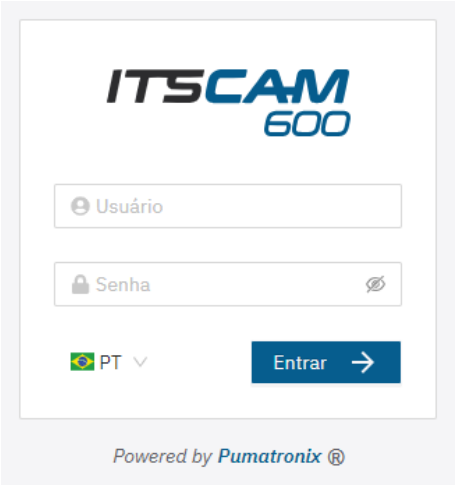


*Figure 10 - VTR600 access screen*

# Image Capture Architecture

To meet the requirements of Intelligent Transportation Systems (ITS), the VTR600 offers various functionalities associated with image acquisition. These functionalities constitute a general architecture and can be disabled by accessing the equipment's Configuration Profiles. The process of image acquisition starts with the image request method (Trigger). In this case, activation can occur at a Constant time interval or when the equipment identifies movement in the image (Motion Trigger). Opting for Motion Trigger enables the Motion Detector functionality. Another feature that enhances the classification of vehicles in the images is the Classifier, which analyzes the images and identifies the type of vehicle.

Once the image capture flow of the VTR600 is defined, the Multiple Exposures feature can be enabled upon request. This technology allows configuring two to eight sequential images, varying the capture parameters with each request.

Identifying the vehicles' license plates in the image can be accomplished by enabling the OCR functionality, available for various countries. To increase reading accuracy, the Majority Vote functionality can also be enabled.

## Motion Detector

Detecting motion between two consecutive VTR600 images depends on the set Threshold variation for Motion Trigger. In addition to this sensitivity, the Region of Interest (ROI) where the movement will be evaluated can be specified by selecting the Enable Trigger region of interest option. This region corresponds to a polygon with four vertices defined by the user on the image being evaluated and remains shaded only in the visualization.

## Classifier

The VTR600 can analyze captured images in real-time and assess the content within the images. The aim is to distinguish motorcycles, cars, trucks, and buses from images that display only the track. This analysis has a classification certainty level, considering image samples used for generating this analytic. It's essential to specify the correct type of installation, as the VTR600 can capture up to 3 lanes of the road simultaneously. For two or three lanes, the panoramic Scenario should be selected.

## Multiple Exposures

The Multiple Exposures feature of the VTR600 generates two to eight sequential images per capture request. This functionality can increase accuracy in automatically identifying license plates and identify vehicles that might have been partially obscured during the initial image capture. The configurable settings include:

- Flash intensity, always corresponding to a percentage of the initial flash. This option is available for Pumatronix ITSLUX illuminator line;
- Image sensor exposure time (Shutter), creating images with varying amounts of captured light;
- Digital post-processing (Gain), allowing for lightening or darkening of images.

## OCR

The VTR600 can recognize vehicle plates from Brazil (in both Brazilian and Mercosul standards), Argentina, Chile, Mexico, Paraguay, Uruguay, and across the entire Southern Cone simultaneously. When enabled, recognition occurs across all captured images. Depending on the vehicle flow and processing demands on the VTR600, the number of processing Threads can be adjusted. It's important to define a Processing Timeout to discard images where plate reading wasn't feasible. The effort spent on plate identification can be set in the Processing Mode.

The OCR allows defining a Region of Interest (ROI) in the image to reduce processing in regions where plate identification isn't required. The ROI visualization image can assess the size of plate characters by configuring the enabled grid size, overlaid on the image display.

### Majority Vote

The Majority Vote is a functionality applied to the results of the automatic reading stage of vehicle plate characters (OCR) and/or Classifier. This analytics determines which character sequence best describes the captured vehicle plate in the image. The algorithm compares the Reliability of identifying each character, based on the character image in perfect reading conditions. This analysis can be performed either on the set of Multiple Exposures images or using sequential images. You can configure parameters such as Maximum different characters and Minimum interval between recognitions of identical plates. During a vehicle's passage through the region monitored by the VTR600, multiple images of the same vehicle can be captured for processing. However, you can enable the option to Send only the exposure with the best recognition, discarding the other images.

# Plugin installation

The processing capacity and infrastructure of the VTR600 enable the execution of applications embedded in the device's virtualized environment. Docker is the virtualization technology used, allowing the execution of third-party applications in an isolated environment using containers.

**The plugin added to the interface will be available using an SD Card formatted with ext4 connected to the VTR600, intended for storing data generated by the plugin**

Access to the plugin uses a specific port for each type. Installing plugins requires the respective license and the .tar file installed in the system through the interface:

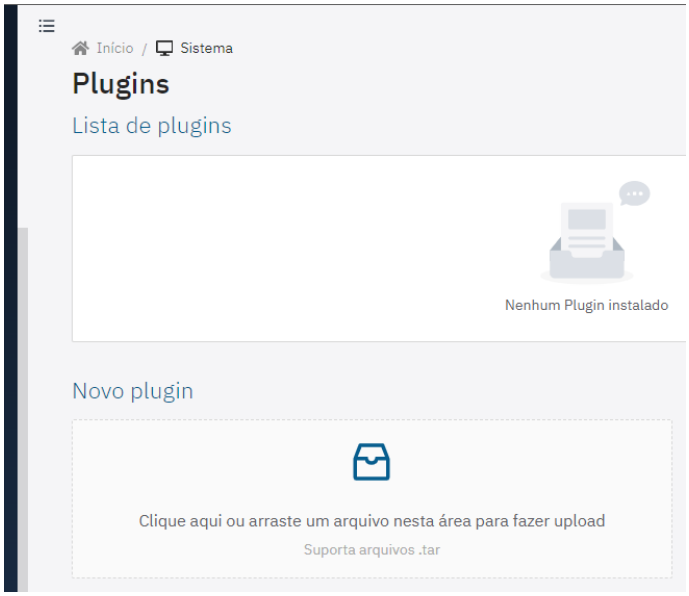


*Figure 11 – VTR600 Web Interface in plugin installation*

# 6. Licensing

The VTR600 license covers the hardware of the image capture and processing device, with automatic recognition of vehicle plates in images (OCR) in both the old Brazilian standard and Mercosul, along with the functionalities presented in this manual. New functionalities and bug fixes are provided in new firmware versions, made available by Pumatronix Technical Support.

# 7. Initial Setup

## Installation Prerequisites

Conditions at the monitoring site, prior to installation, are essential for the equipment's operation.

### Equipment Installation Location

The VTR600 series can be installed on the roof of any vehicle, with the ability to adjust the frame to capture up to three lanes. When installing, the necessary frame for the image should be considered, taking the vehicle's hood as the lower limit and the sky as the upper limit, as indicated in the image:

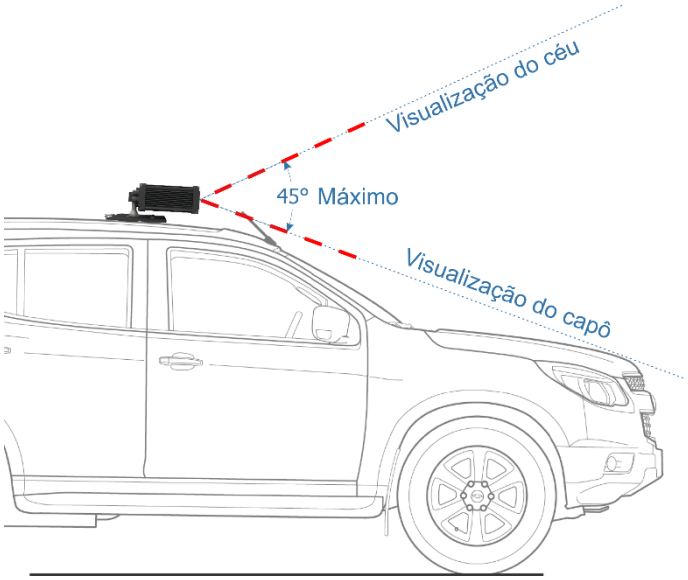


*Figure 12 – Illustration of the Ideal Angle and Enframe Limits*

During installation, the maximum vertical tilt angle of 45 degrees must be respected. Applying a larger angle results in significant image distortions, leading to a reduction in the automatic recognition rate of captured vehicle license plates.

## Required Infrastructure

- Vehicle power source (battery or cigarette lighter);
- Data network connectivity near the equipment (based on the chosen mode);
- Security cable attached to the vehicle rack;
- Availability of an Auxiliary Configuration Equipment (for framing conference and image adjustments), with the Google Chrome browser (version 85 or higher) installed.

# Required Installation Conditions

Refer to the Installation and Maintenance Guide on how to make the necessary connections.

**Installation Location: In cases where meeting installation specifications is not feasible, it is recommended to consult Pumatronix's Technical Support.**

## Parameterization of the Network Interface

| Ethernet Port Configuration | Default value |
|---|---|
| IP Address | 192.168.0.254 |
| Maintenance IP address | 192.168.254.254 |
| Netmask | 255.255.255.0 |

**Check in the Wi-Fi Network Configuration how to set up the Wi-Fi, 4G, and 3G network interfaces as they are disabled in the equipment's factory default settings.**

In situations where the VTR600 network configuration differs from the default, it is recommended to change the settings prior to the physical installation of the equipment on-site. The altered network configuration is saved in the flash memory but is effectively applied after the equipment is restarted. When the change is made through the Web interface, the reboot is automatic after confirming the alteration.

The VTR600 has a recovery IP address (192.168.254.254) for cases where the user mistakenly changes the IP address and loses connection with the device. The use of this IP address for access recovery is available only in a point-to-point connection with the equipment when connected to the Ethernet port.

**The maintenance IP address of the VTR600 (192.168.254.254) is disabled when the primary IP address conflicts with it. Therefore, when manually configuring the equipment's network interface (Ethernet), different values from the maintenance IP should be applied as there won't be a way to recover the connection in extraordinary situations of primary IP loss.**

The most common situations of conflict between the primary IP address and maintenance IP are:

- Primary IP of VTR600 in the range 192.168.254.x and netmask 255.255.255.0
- Primary IP of VTR600 in the range 192.168.x.x and netmask 255.255.0.0
- Primary IP of VTR600 in the range 192.x.x.x and netmask 255.0.0.0
- Net mask defined as 0.0.0.0

## Wi-Fi Network Configuration

**VTR600 Connectivity: The Wi-Fi, 4G, and 3G network interfaces are disabled in the equipment's factory default settings.**

1) Access the device's web interface with the credentials registered in the network interface parameterization;
2) Go to Equipment > Network in the Wi-Fi tab;
3) Select the Station (STA) operation mode to connect to an existing Wi-Fi network;
4) Click on the SSID field, and the available nearby Wi-Fi networks for connection will be listed for selection;
5) Choose the Authentication Protocol to be used: Open (no authentication), WEP, or WPA/WPA2 PSK;
6) Enter the password for access to the selected Wi-Fi network;
7) Click on the Apply button at the top of the page to validate the entered data.

Select the Access Point (AP) operation mode only when you want the device to be used as an access point to an available Wi-Fi network:

1) Enter the identification data (SSID), Country, Channel, and Authentication Protocol to be applied in distributing the Wi-Fi connection;
2) Enter the IP Address and Subnet Mask of the DHCP Server determining the address range for devices connecting to the Access Point.

**Use a DHCP server IP address different from the one applied for accessing the VTR600 device and different from the maintenance IP to avoid conflicts and network malfunctions.**

## 3G or 4G Mobile Network Configuration

Some mobile internet providers require manual network data configuration:

1) Access the device's web interface with the credentials registered in the network interface parameterization;
2) Go to Equipment > Network in the Mobile tab;
3) Click Enable, and the configuration fields will be visible;
4) Enter personalized data whenever necessary to configure the carrier's information. By default, the information is:
    a. APN: http://[operator name].com.br;
    b. User: [operator name];
    c. Password: [operator name];
5) Click Apply to save the network settings.

# 8. First Access

The VTR600 Web interface can be used to quickly check the equipment status and the area being captured in images. However, the equipment must be powered on, following the Electrical Specifications. An Auxiliary Configuration Equipment (for framing verification and image adjustments) with the Google Chrome browser (version 85 or higher) installed should be used.

Additionally, the Auxiliary Configuration Equipment must be on the same data network as the VTR600 (with a network configuration compatible with the one set on the VTR600). If a point-to-point connection is used, access to the VTR600 can be made via the maintenance IP address 192.168.254.254. When entering the VTR600's IP address in the address bar of the Auxiliary Configuration Equipment's browser, the following should be provided:

| | |
|---|---|
| **User** | *admin* |
| **Password** | *1234* |

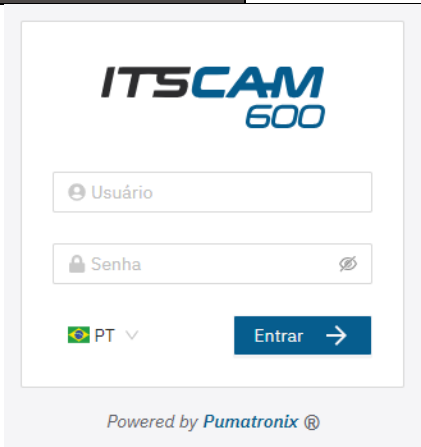


*Figure 13 - VTR600 access screen*

# 9. Care and Maintenance

Some precautions are necessary to ensure the product's performance and extend its lifespan.

**Product Risks: The use of the product presents risks, which are presented in the Handling Risks section.**

# Firmware Update

Pumatronix periodically releases updates for the VTR600, including defect corrections and new functionalities, available through contacting Technical Support on the Pumatronix website. The equipment update process requires an Auxiliary Configuration Equipment to connect to the device and can be directly performed through its web interface using one of the following web browsers:

- Microsoft Edge 109 or higher;
- Google Chrome version 38 or higher;
- Firefox version 21 or higher;
- Opera 25 or higher;
- Safari 8 or higher.

The VTR600 firmware update requires some security measures during the procedure to prevent file corruption and device malfunction:

1) Keep the VTR600 device inactive during the update process, ensuring it is not requested by any service or other equipment on the network where it's installed;
2) Ensure the VTR600 device remains powered on during the update, taking necessary steps to prevent it from restarting or shutting down;

Request the firmware file by filling out the form available on the Technical Support menu on the Pumatronix website:

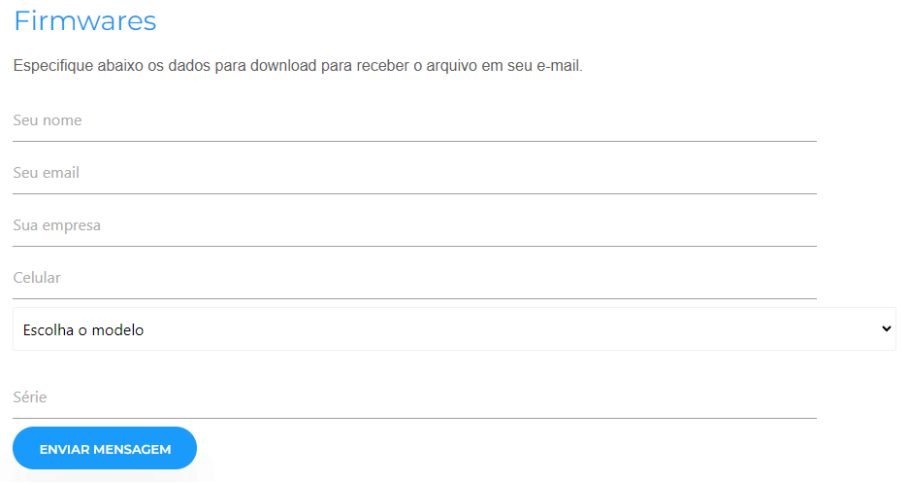


*Figure 14 – Online Firmware Request Form*

If you have any questions, please contact Technical Support at suporte@pumatronix.com or WhatsApp +55 (41) 9203-8327.

** Pumatronix will provide versions with bug fixes or security improvements for up to 3 years after the product has been discontinued and removed from the portfolio.*

## Updating Analytical Licenses

The licenses for the image analytics libraries, Classifier, and OCR can be updated directly through the web interface. Upon receiving the .lic file provided by Technical Support, access the System menu > Licenses in the interface and drag it to the indicated area:

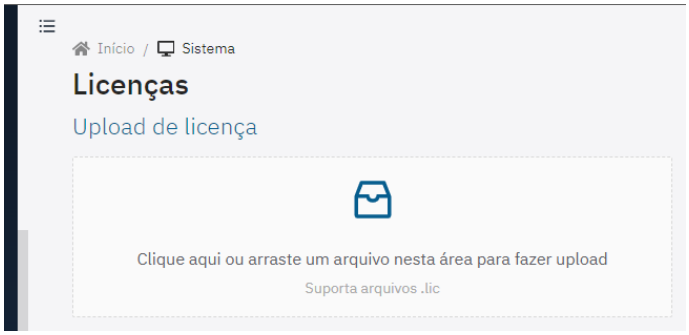


*Figure 15 – VTR600 Web Interface for License Update*

## Preventive Maintenance of the VTR600 Device

The VTR600 image capture and processing device should deliver artifact-free images. However, if the external surface of the lenses or protective casing accumulates dirt, perform the cleaning procedure:

1) Spray lens cleaning liquid onto the lens surface or water onto the protective casing glass to remove adhered dirt excess;
2) Use a soft, non-abrasive cloth to remove the dirt, moving the cloth in a single direction;
3) Finish by wiping with a dry cloth and avoid using excessive force to prevent surface damage.

# 10. General Warranty Conditions

Pumatronix guarantees the product against any material defect or manufacturing process for a period of 1 year from the date of the invoice, provided that, at the discretion of their authorized technicians, a defect under normal conditions of use is detected.

Replacement of defective parts and the execution of services arising from this Warranty will only be carried out at Pumatronix's Authorized Technical Assistance or by a third party expressly indicated by them, where the product should be delivered for repair.

This Warranty will only be valid if the product is accompanied by a Maintenance Form duly completed and without erasures and accompanied by an Invoice.

## Situations in which the Product loses its warranty

1) Use of software/hardware not compatible with the specifications in the Manual;
2) Connection of the product to the mains outside the standards established in the product manual and installations that present excessive voltage variation;
3) Infiltration of liquids from the opening/closing of the product;
4) Damage caused by natural agents (electric discharge, flood, sea spray, excessive exposure to climatic variations, among other factors) or excessive exposure to heat (beyond the limits established in the Manual);

5) Use of the product in environments subject to corrosive gases, with excessive moisture and/or dust;
6) Show signs of tampering with security seals;
7) Present opening and modification signals made by the Customer in product locations not authorized by Pumatronix;
8) Damage caused by accidents/falls/vandalism;
9) Display tampered and/or removed serial number;
10) Damage arising from the transport and packaging of the product by the Customer under conditions incompatible with it;
11) Misuse and in disagreement with the Instruction Manual.

# 11. Privacy Policy

In accordance with the General Data Protection Law (LGPD) - Law No. 13.709, of August 14, 2018, this product has programmable functions for the capture and processing of images that may infringe the LGPD when used, together with other equipment, to capture personal data.

The equipment does not collect, use or store personal information, sensitive or not for its operation.

Pumatronix is not responsible for the purposes, use and treatment of the images captured, and the control of the information and forms of operation of the product are the sole decision of the user or purchaser of the product.