PUMATRONIX

ITSCAM FF 600

THE MOST COMPLETE AND VERSATILE SOLUTION FOR SUPERVISION AND SECURITY

Installation

POSITIONING ITSCAM FF 600 AT VIA

1. Select an existing pole or gantry that allows positioning the ITSCAM FF 600 preferably centered on the track, with the objective of capturing images of one or two lanes of the track, considering the linear distance between the equipment and the image center:

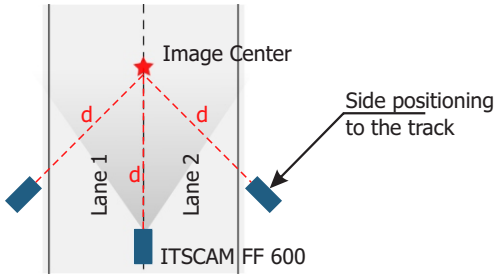

D minimum	**10 meters**
D maximum	**17 meters**

When using an Illuminator in conjunction with ITSCAM FF 600, check in the product specifications which minimum and maximum distance must be observed in relation to the position of the object to be illuminated.

CONNECTING TO ITSCAM FF 600

2. Pass the connection cables through the PG9 cable glands, considering the preferred usage of each:

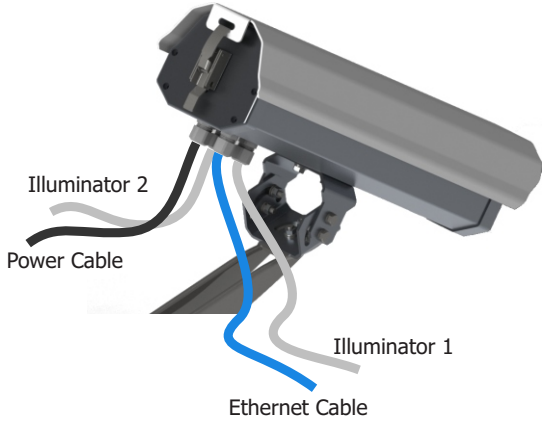

3. Tighten the cable gland until the cable is completely fixed.

4. Go to the available interfaces on the *Connections Board* or on the back panel of the ITSCAM 600 device to connect the cables:

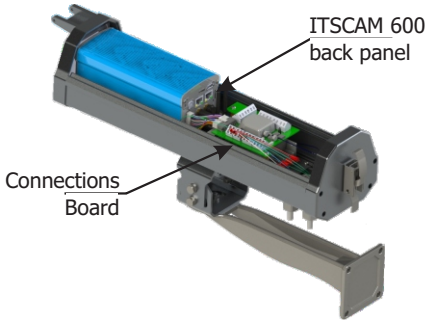

5. Use the connectors available on the back panel of the ITSCAM 600 device:

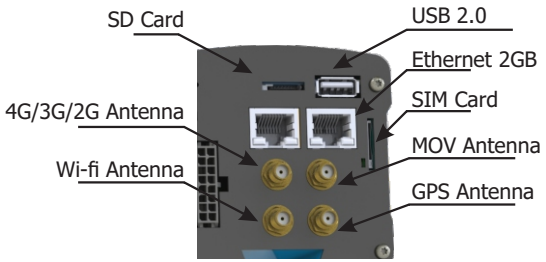

The SD card must always be plugged in for the correct functioning of ITSCAMPRO Móvel plugin .

6. Make the RS-485 and RS-232 data connections with the *Connections Board* considering the P8 connector interface and the respective colors:

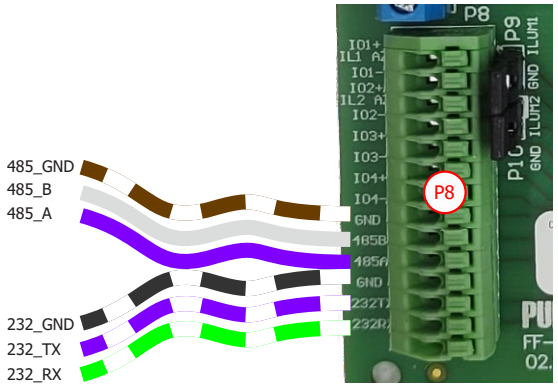

7. Perform power connections to the *Connections Board*, considering the P3 connector interfaces and their respective colors:

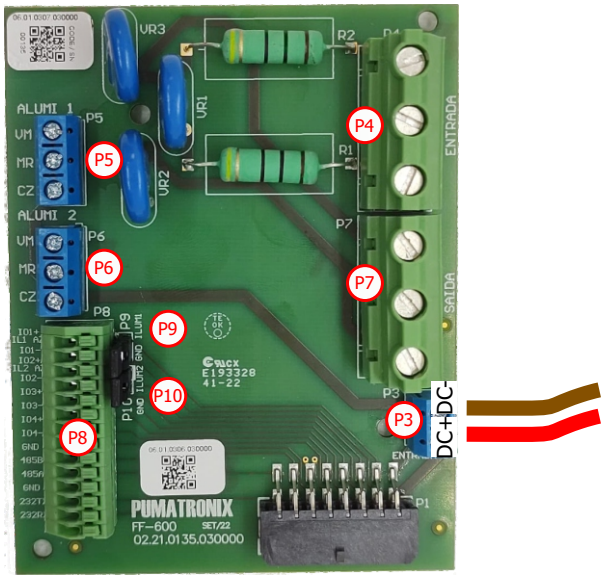

NETWORK INTERFACE PARAMETERIZATION

8. Connect the ITSCAM FF 600 to an auxiliary device disconnected from the local network in which the equipment will be installed, using an Ethernet cable:

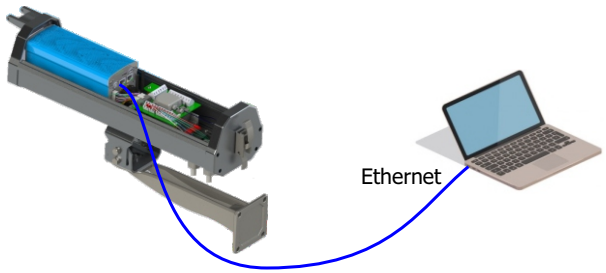

9.Access the ITSCAM FF 600 interface using a Google Chrome browser (from version 85 or higher) with the default factory data:

IP	**192.168.0.254**
Username	**Admin**
Password	**1234**

10. Go to the menu *Equipment* > *Network* on the *Ethernet* tab.

11. Enter a network ID in the *Hostname* field.

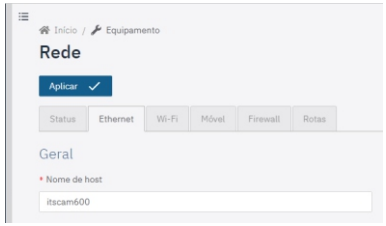

12. Select the *IPv4* connection type to *Enabled (manual)*.

13. Enter the *Primary Interface (ETH-1)* data, changing the default values of IP address 192.168.0.254 and subnet mask 255.255.255.0 to values other than those that might cause conflict on the existing network:

Values that cause conflict	
IP Adress	**Network Mask**
192.168.254.x	255.255.255.0
192.168.x.x	255.255.0.0
192.x.x.x	255.0.0.0
	0.0.0.0

The maintenance IP of the ITSCAM FF 600 (192.168.254.254) is used to recover the connection in extraordinary situations of loss of the primary IP. For this reason, when manually configuring the equipment network interface (Ethernet or Wi-Fi), diferent values from the maintenance IP must be applied.

14. Confirm the changes by clicking on the *Apply* button at the top of the of the page:

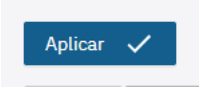

15. Disconnect the ITSCAM FF 600 from the auxiliary device and connect the equipment to the network of the final installation.

16. Repeat steps 8 to 15 if there is a connection loss or IP address conflict.

17. Log on with the maintenance IP address 192.168.254.254, just in case of any network conflicts.

WI- FI NETWORK CONFIGURATION (IoT DEVICES)

The Wi-Fi, 4G and 3G network interfaces are disabled in the equipment's factory default settings.

18. Access the device's web interface with data recorded in the *NETWORK INTERFACE PARAMETERIZATION*.

19. Go to menu *Equipment* > *Network* at *Wi-Fi* tab.

20. Choose the *Station (STA)* Operation Mode for connecting to an existing Wi-Fi network.

21. Click on the *SSID* field and the nearby Wi-Fi networks available for connection are listed for selection.

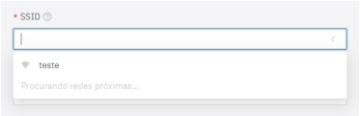

22. Select the *Authentication Protocol* a ser utilizado: *Open (sem autenticação)*, *WPA*, *WPA2, WPA & WPA2*.

23. Enter the password to access the selected Wi-Fi network.

24. Click on the *Apply* button at the top of the page when validating the entered data.

ACCESS POINT SETUP

25. Select the *Access Point (AP)* operating mode only when the device is to be used as an access point to an available WiFi network.

26. Enter the identification data (*SSID*), the *Country*, the *Channel* and the *Authentication* protocol that will be applied when distributing the WiFi connection.

27. Enter the *IP Address* and *Subnet Mask* of the *DHCP Server* to determine the address range for the devices that will connect to the access point.

Use a different IP address from the one used to access the ITSCAM FF 600 device in order to avoid conflicts and malfunctioning of the data network.

The maintenance IP of the ITSCAM FF 600 (192.168.254.254) is used to recover the connection in extraordinary situations of loss of the primary IP. For this reason, when manually configuring the equipment network interface (Ethernet or Wi-Fi), different values from the maintenance IP must be applied.

3G OR 4G MOBILE NETWORK SETUP

The Wi-Fi, 4G and 3G network interfaces are disabled in the equipment's factory default settings.

29. Access the device's web interface with data recorded in the NETWORK INTERFACE PARAMETERIZATION.

30. Go to menu *Equipment* > *Network* on the *Mobile* tab.

31. Click on *Enabled* and the configuration fields will be displayed.

***Users of the Claro operator must manually fill in the APN configuration fields with data:**
APN: claro.com.br
User: claro
Password: claro

*For operators with a personalized *APN*, *User* and *Password*, the fields must be filled in for the 3G or 4G connection to work.

32. . Click on *Apply* to save the network settings.

FASTENING OF ITSCAM FF 600 ON POLE

33. Perform the fixing of the ITSCAM FF 600, with cables passed and attached to the cable glands, on the *Pole Bracket* using the 4 screws M6 x 25.

34. Provide stainless steel clamps with enough length and appropriate to the diameter of the installation pole.

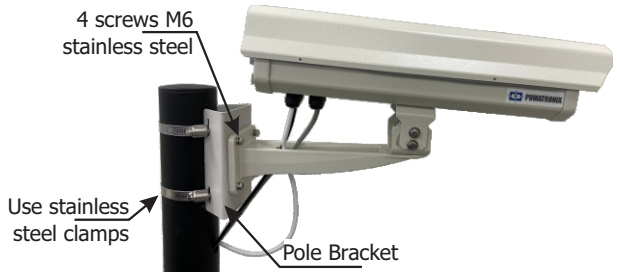

35. *Place the ITSCAM FF 600 + Pole Bracket* assembly over the via, respecting the minimum height limits specified for the site and the minimum and maximum distances indicated in *POSITIONING ITSCAM FF 600 AT VIA.*

36. Avoid blocking out parts of the image by objects such as trees or vehicles from other tracks.

37. Install the ITSCAM FF 600 at a slight angle, so that the license plate appears in the image aligned with the horizontal plane.

FRAMEWORK SETTINGS

38. Move the equipment's base articulation to tilt vertically or rotate horizontally by loosening the respective screws:

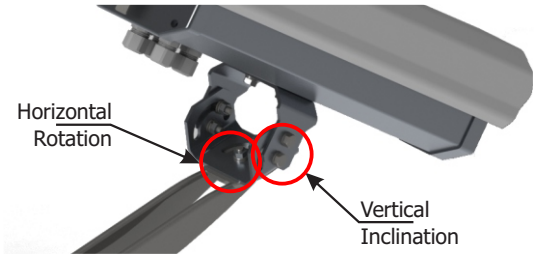

39. Tilt the equipment on the base until the best framing fit, considering the maximum angle limit of **45°** for vertical tilt. Greater angles of vertical inclination generate significant deformations in the generated images.

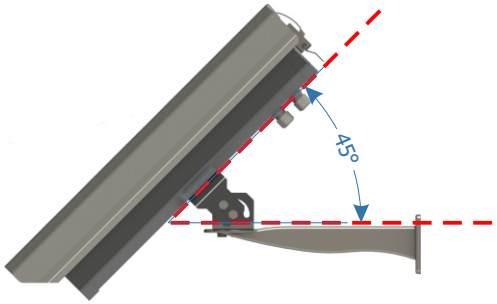

40. Access the device's web interface with data recorded in the *NETWORK INTERFACE PARAMETERIZATION*.

41. Check at the home screen the available zoom and focus controls in the *Live feed* window (of adjustable size), in the scroll bars on the left. If it is not enabled, select from the window's settings:

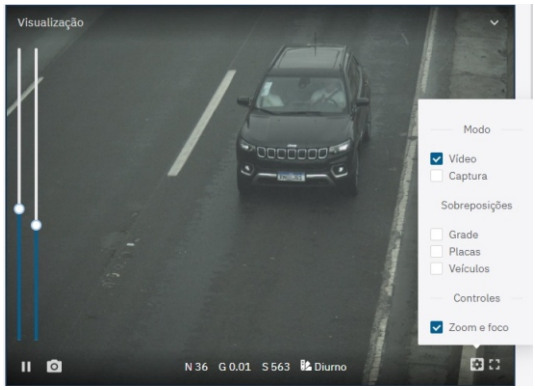

42. Increase or decrease the *Live feed* window to facilitate zoom and focus adjustment.

43. Adjust the desired zoom and focus position, until the license plate is readable and in capture condition (height approximately 20 pixels).

44. Repeat steps 38 to 43 until the image of the plate is obtained with optimal framing and character clarity.

ITSLUX POSITIONING

When using an Illuminator in conjunction with ITSCAM FF 600, check in the product specifications which minimum and maximum distance must be observed in relation to the position of the object to be illuminated.

45. Fasten 1 or 2 illuminators optionally to the same pole and just below the ITSCAM FF 600 device, keeping the minimum distance of 50 centimeters.

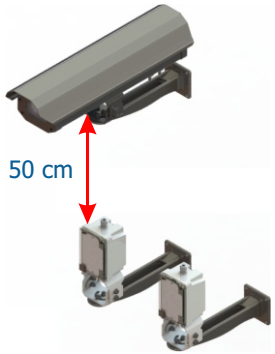

ITSLUX ELECTRICAL CONNECTIONS

46. Connect the cable wires of 1 ITSLUX to the P5 and P8 connectors, following the colors indicated on the *Connections Board*:

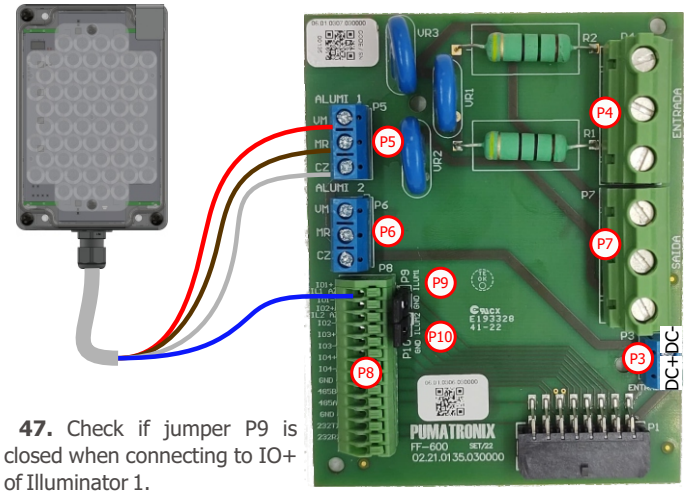

47. Check if jumper P9 is closed when connecting to IO+ of Illuminator 1.

48. Connect the wires of the 2 ITSLUX cables to the P5, P6 and P8 connectors, following the colors indicated on the *Connections Board*:

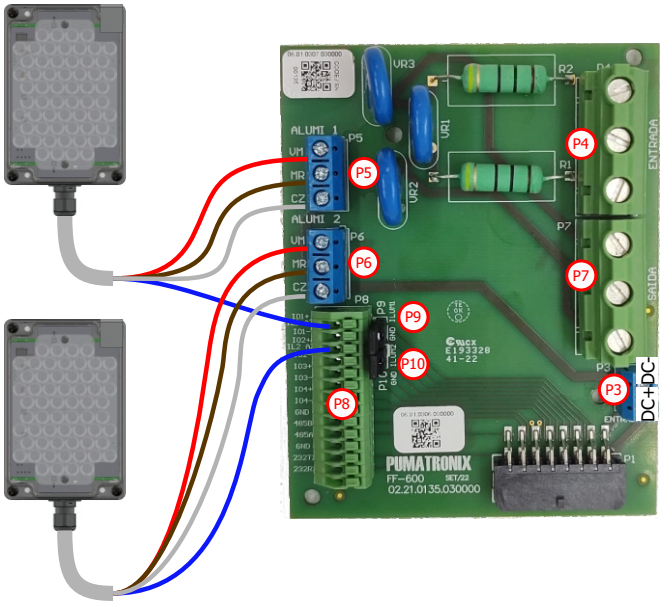

49. Check if jumper P9 and P10 are closed when connecting to IO+ of Illuminators 1 and 2.

FIRMWARE UPGRADING

Follow the security measures during the upgrade process:

*** Keep the ITSCAM FF 600 device inactivated during the upgrade process, guaranteeing that it is not requested by any service or other equipment on network in which it is installed;**
*** Keep the ITSCAM FF 600 device powered on at all times during the upgrade process, making sure to take the necessary steps to prevent it from being restarted or switched off.**

* Request the firmware file by filling out the form available in the *Technical Support* menu at Pumatronix website.

* Access in the Product Manual the step-by-step installation of firmware updates and of the ITSCAMPRO Móvel plugin.

WARRANTY TERM

Pumatronix warrants the product against any defect in material or manufacturing process for a period of 1 year from the invoice issue date, provided that, at the discretion of its authorized technicians, a problem is found under normal use conditions.

The replacement of defective parts and the execution of services resulting from this warranty will only be carried out at the Pumatronix Authorized Technical Assistance or a third party expressly indicated by it, where the product must be delivered for repair.

This warranty will only be valid if the product is accompanied by the Maintenance Form duly filled out and without erasures and followed by the Invoice.

SITUATIONS WHERE PRODUCT LOSES WARRANTY

1) Usage of software/hardware not compatible with the specifications in the Manual;
2) Connecting the product to the power grid outside the standards established in the product manual and installations that present excessive voltage variation;
3) Liquid infiltration resulting from the product opening/closing;
4) Natural damage (electric discharge, flood, sea fog, excessive exposure to climate variations, among other factors) or excessive exposure to heat (beyond the limits established in the manual);
5) Usage of the product in environments that are susceptible to corrosive gases, excessive humidity and/or dust;
6) To present signs of security seals tampering;
7) Show signs of opening and modification made by the customer in parts of the product not authorized by Pumatronix;
8) Damage caused by accidents/falls/vandalism;
9) To present adulterated and/or removed serial number;
10) Damages resulting from transportation and packaging of the product by the customer in conditions incompatible with it;
11) Misuse and in disagreement with the Instruction Manual.

PRIVACY POLICY

In compliance with the General Law on Data Protection (LGPD) - Law No. 13,709, of August 14, 2018, this product has programmable functions for capturing and processing images that may infringe the LGPD when used, in conjunction with other equipment, to capture personal data.

Pumatronix is not responsible for the purposes, use and treatment of the images captured, and the control of the information and forms of operation of the product are the sole decision of the user or acquirer of the product. is the sole decision of the user or acquirer of the product.

INDÚSTRIA BRASILEIRA DE TECNOLOGIA

*** For additional information, access the product manual at www.pumatronix.com.br.**

TECHNICAL SUPPORT
+55 41 3016 – 3173 | suporte@pumatronix.com

Movement in Focus.

PUMATRONIX www.pumatronix.com